Driver Specification Sheet

Peerless by TYMPHANY

Model No:: SDS-P830657

Product Line: Peerless

Rev: 1

Last Update: 2017-04-25 14:32:09

Product Description

The SDS compact subwoofer family offers low resonant frequency performance, ideally suited for compact sealed enclosures. This 6.5 inch 8 ohm member of the SDS family offer a coated paper cone with rubber surround, a high power voice coil suspended in a ferrite magnet motor, and a narrow-profile steel basket, shaped to fit into narrow cabinets.

Mechanical Drawing

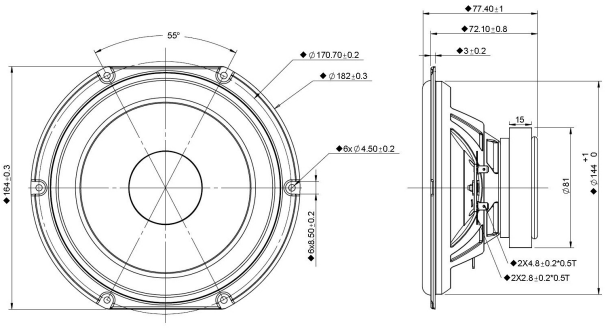

Specifications

DC Resistance	Revc	Ohms	6.05	5.0%	Energy Bandwidth Product	EBP	(1/Qes)*fs	
Minimum Impedance	Zmin	Ohms	6.44	7.5%	Moving Mass	Mms	g	11.5
Voice Coil Inductance	Le	mH	0.38		Suspension Compliance	Cms	um/N	1101.4
Resonant Frequency	Fs	Hz	44.75	15%	Effective Cone diameter	D	cm	13.4
Mechanical Q Factor	Qms		2.74		Effective Piston Area	Sd	cm^2	141
Electrical Q Factor	Qes	0.55			Effective Volume	Vas	L	30.77
Total Q Factor	Qts		0.46		Motor Force Factor	BL	Tm	5.98
Ratio Fs/Qts	F	Fs/Qts	98.35		Motor Efficiency Factor	ß	(T*M^2)/Ohms	5.9
Half Space Sensitivity @2.83V	db@2.83V/1M	dB	89.46	+/- 1.0db	Voice coil former Material	VCfm		ASV
Half Space Sensitivity @1W/1M	db@1W/1M	dB	88.5	+/- 1.0db	Voice coil inner diameter	VCd	mm	25.73
Gap Height	Gh	mm	6		Rated Noise Power	P	W	60
Maximum Linear Excursion	Xmax	mm	3.5		Test Spectrum Bandwidth	40Hz - 4kHz		
Ferrofluid Type	FF				Driver Size	Inch	6 in	
Driver Mass	Kg	0.84						

Frequency and Impedance Response

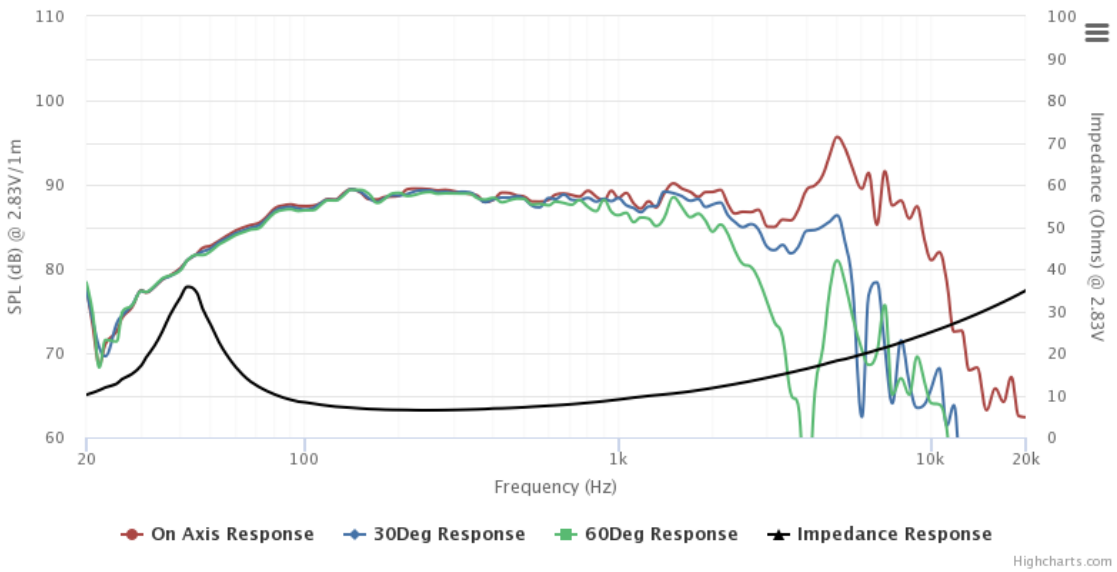

Tymphany HK LTD
Address : Room 1307-8 Dominion Centre, 43-59 Queens Rd East, Wanchai, Hong Kong
E-mail: sales@tymphany.com